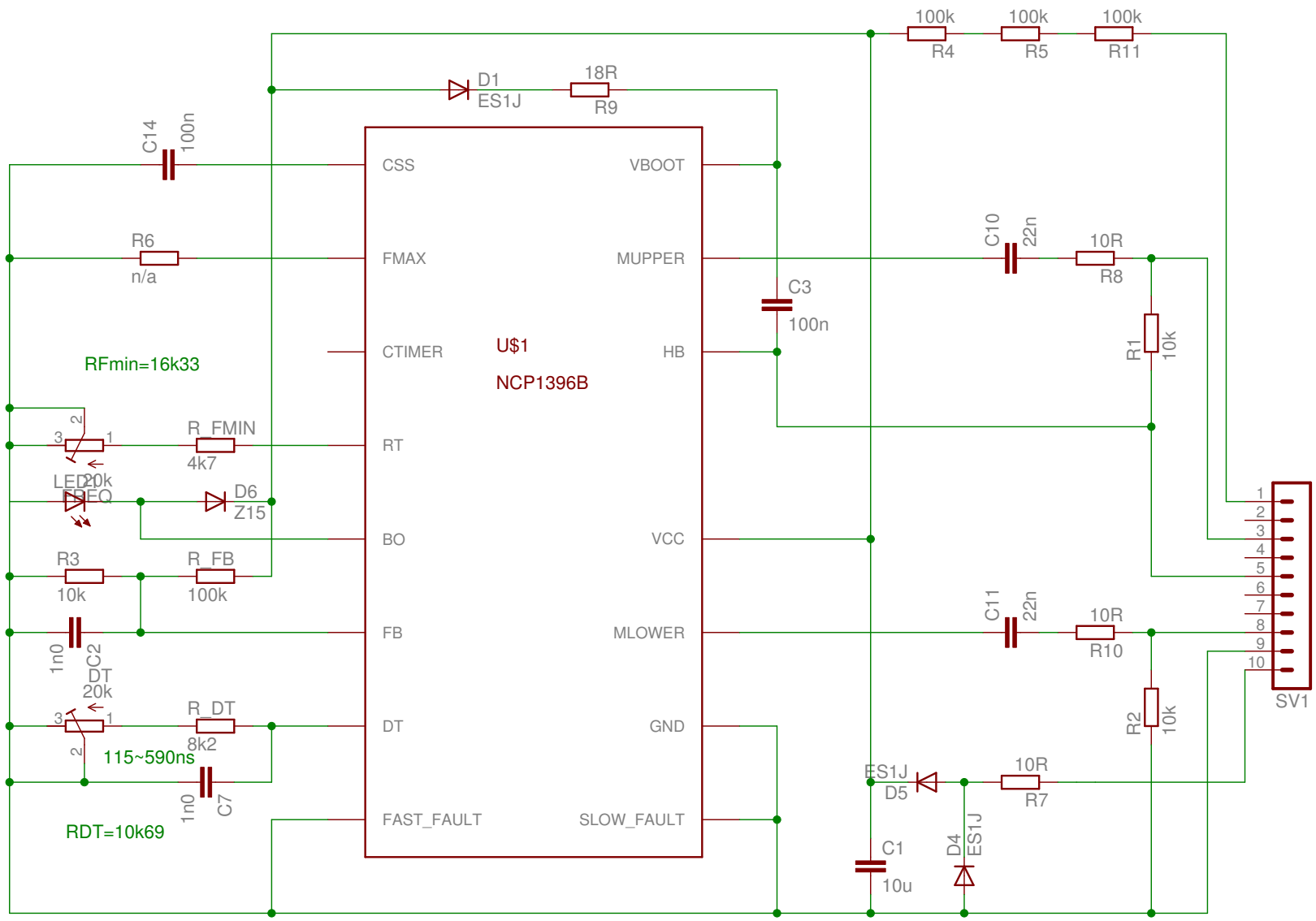

230V-LLC-Konverter, controller module