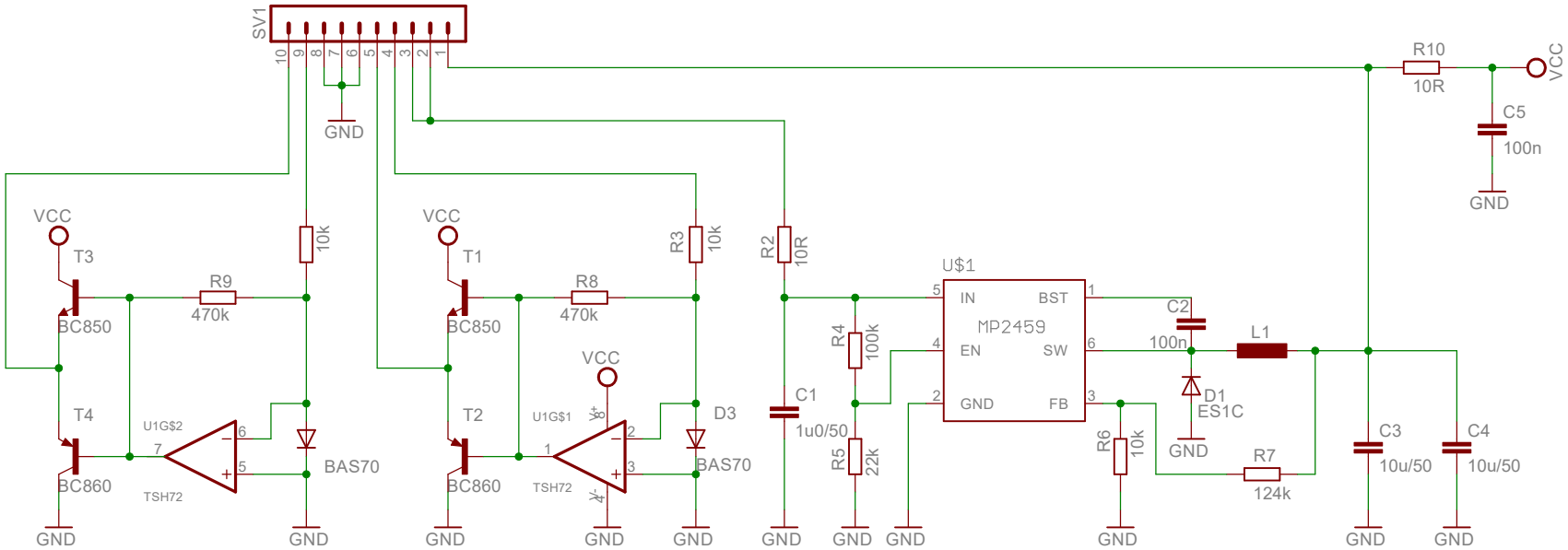

230V-LLC-Converter, sync rect control